DISP. CODE	G MAX
036	134.7 [5.30]
046	137.0 [5.39]
057	139.2 [5.48]
073	142.7 [5.62]
088	145.8 [5.74]
101	148.5 [5.85]
114	151.2 [5.95]
137	156.1 [6.14]
182	165.7 [6.52]
227	175.1 [6.89]

REV	DESCRIPTION	BY	CHK	DATE	ECN
A	ENGINEERING RELEASE	SMM		06-09-04	48257
B	-1)(8C) WAS 177.1\[6.97] MAX -2)(2B) WAS ø122.2\[4.81] MAX	SRM		04-07-04	ECR8166
C	-1) (8A) NOTE 2 WAS MOUNTING FLANGE : "H :-....." -2) (8A) NOTE 3 WAS CASE DRAIN : 1...	TTV	CSG	04-08-16	0070053

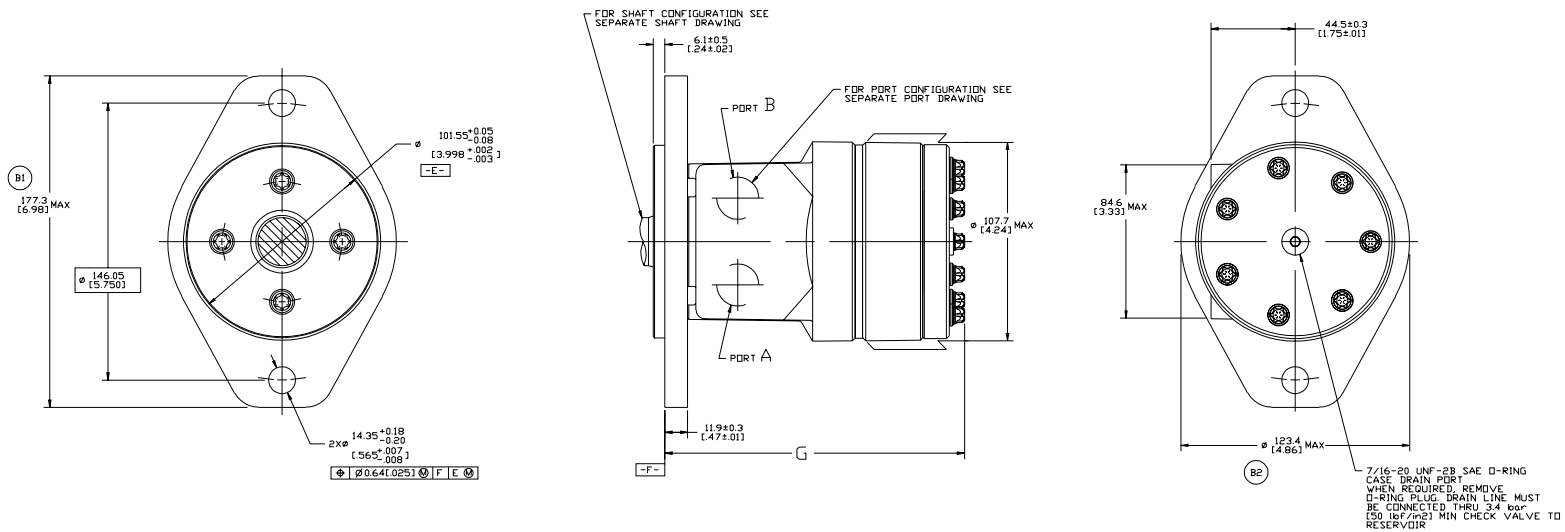

NOTE

1 ROTATION:
STANDARD; WHEN FACING SHAFT END OF MOTOR, SHAFT TO ROTATE CLOCKWISE WHEN PORT "A" IS PRESSURIZED. COUNTERCLOCKWISE WHEN PORT "B" IS PRESSURIZED.

REVERSE ; WHEN FACING SHAFT END OF MOTOR, SHAFT TO ROTATE CLOCKWISE WHEN PORT "B" IS PRESSURIZED. COUNTERCLOCKWISE WHEN PORT "A" IS PRESSURIZED.

2 MOUNTING FLANGE:
DD,DN = 2 BOLT STD: 4.00/101.6 DIA. X .24/6.1 PILOT, .565/14.35 DIA. MOUNTING HOLES ON 5.75/146.0 DIA. B.C. (SAE B)

3 CASE DRAIN:
01 = 7/16-20 UNF-2B SAE O-RING PORT (END CAP)

REVIEWED FOR CLASSIFICATION PER ESP-042

DRAWING BASED ON ANSI Y14.5M-1982

UNLESS OTHERWISE SPECIFIED ALL DIMENSIONS ARE IN INCHES ☐ MILLIMETERS (INCHES) ☒

TOLERANCES
X ± ----
XX ± ----
XXX ± ----
∠ ± ----

UNSPECIFIED RADII ARE ---

UNSPECIFIED DRAFT ANGLES ARE ---

DRAWING FORMAT CADD ☒ MANUAL ☐

THE REPRODUCTION, DISTRIBUTION, AND UTILIZATION OF THIS DOCUMENT, AS WELL AS THE COMMUNICATION OF ITS CONTENTS TO OTHERS WITHOUT EXPLICIT AUTHORIZATION IS PROHIBITED. OFFENDERS WILL BE HELD LIABLE FOR THE PAYMENT OF DAMAGES. ALL RIGHTS RESERVED IN THE EVENT OF THE GRANT OF A PATENT, UTILITY MODEL, OR DESIGN. (PER ISO 16016)

Danfoss

DRAWN BY/DATE SMM 07-02-04
CHECKED BY/DATE AGJ 07-06-04
ENGR. BY/DATE JML 07-06-04
METALLURGY BY/DATE ----
THIRD ANGLE PROJECTION
DO NOT SCALE

MATERIAL/HEAT TREAT

TITLE
S MOTOR INSTALLATION

REMOVES ☐ REVISES ☐ REVISIONS (REMOVES) ---/ ARITHMETICAL AVERAGE

NUMBER A-1470-104

SCALE 1/1 SHEET 1 OF 1